PRODUCT DATASHEET
HIGH BAY VALUE 100 W 6500 K 100 DEG IP65 BK

HIGH BAY VALUE | High-bay luminaires up to 110 lm/W

VALUE CLASS

Areas of application

- Replacement for high bay luminaires with mercury vapor or metal halide lamps
- Warehouses
- Logistics halls
- Industry
- High ceiling (e.g. in shopping malls, airports, commercial buildings, lobbies)

Product benefits

- Modern exclusive design
- Energy savings of up to 60 % compared to conventional high bay luminaires
- 3 years guarantee
- Optimized weight and size due to compact design

Product features

- Operating temperature: -20…50 °C
- Black aluminum housing, tempered glass cover
- Opal cover
- Type of protection: IP65
- Lifetime (L70): up to 50,000 h
- High luminous efficacy: up to 110 lm/W

© 2025, LEDVANCE GmbH. All rights reserved.

TECHNICAL DATA

Electrical data

Nominal wattage	100.00 W
Nominal voltage	220…240 V
Mains frequency	50…60 Hz
Nominal current	450 mA
Inrush current	7.72 A
Inrush current time T_{h50}	3.4 µs
Max. number of luminaires per miniature circuit breaker B16	28
Max. number of luminaires per miniature circuit breaker C10	17
Max. number of luminaires per miniature circuit breaker C16	28
Power factor λ	≥0.90
Total harmonic distortion	< 20 %
Protection class	I
Operating mode	Mains voltage

Photometrical data

Luminous flux	10000 lm
Luminous efficacy	100 lm/W
Color temperature	6500 K
Light color (designation)	Cool Daylight
Color rendering index Ra	> 80
Standard deviation of color matching	< 5 sdcm
Photobiological safety group acc. to EN62778	RG1
Photobiological safety group acc. to EN62471	RG1
Beam angle	100 °

© 2025, LEDVANCE GmbH. All rights reserved.

HIGH BAY VALUE 100W

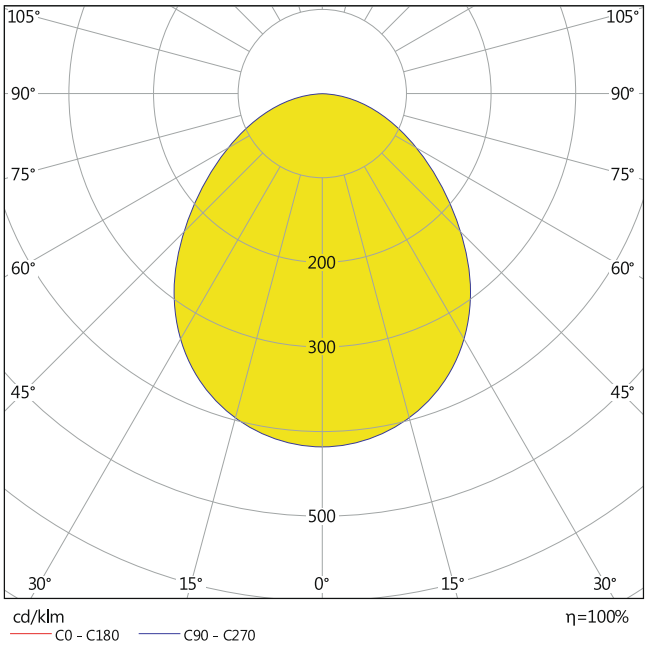

HIGH BAY VALUE 100W

Dimensions & Weight

Diameter	230.00 mm
Height	51.40 mm
Product weight	1338.00 g
Cable length	500 mm

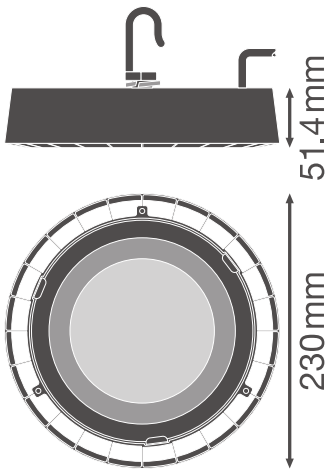

HIGHBAY VALUE 100W

© 2025, LEDVANCE GmbH. All rights reserved.

Materials & Colors

Product color	Black
Housing color	Black
Body material	Aluminum
Cover material	Tempered glass
Glow Wire Test according to IEC 60695-2-12	650 °C
Mercury content	0.0 mg

Application & Mounting

Ambient temperature range	-20…+50 °C
Type of connection	Cable, 3-pole
Type of protection	IP65
Protection class IK (shock resistance)	IK06
Dimmable	No
Mounting type	Suspended/Surface
Mounting location	Ceiling
Application environment	Indoor
With light source	Yes
Replaceable light source	No

Lifespan

Lifespan L70/B50 at 25 °C	50000 h [1)]
Lifespan L80/B10 at 25 °C	32000 h [1)]
Lifespan L80/B50 at 25 °C	36000 h
Number of switching cycles	50000

1) t[h]: L70 / B50 @ 25 °C (Ta), t[h]: L80 / B10 @ 25 °C (Ta), t[h]: L90 / B10 @ 25 °C (Ta)

Certificates & Standards

Standards	CE / CB / EAC
Luminaire with limited surface temperature, "D sign"	Yes
Ball shot safe	No
Replaceable light source (EPREL)	Not replaceable

EQUIPMENT / ACCESSORIES

- Bracket available

© 2025, LEDVANCE GmbH. All rights reserved.

DOWNLOAD DATA

	Documents and certificates	Document name
PDF	User instruction / safety instructions	HIGH BAY VALUE USER INSTRUCTION
PDF	Legal information	Legal insert HB VAL AND HB COMP V
PDF	Declarations of conformity	HB VAL

	Photometric and lighting design files	Document name
IES	IES file (IES)	HB VALUE 100W 6500K 100DEG IP65
LDT	LDT file (Eulumdat)	HB VALUE 100W 6500K 100DEG IP65
	UGR file (UGR table)	HIGH BAY VALUE 100W
	Light distribution curve type cone	HIGH BAY VALUE 100W
	Light distribution curve type polar	HIGH BAY VALUE 100W

	CAD/BIM files	Document name
RFA	BIM Revit 3D	High Bay Value
STEP	CAD STEP 3D	HB VAL 100W

	Tender texts	Document name
TXT	Tender documents	HIGH BAY VALUE 100 W 6500 K 100 DEG IP65 BK-EN

LOGISTICAL DATA

Product code	Packaging unit (Pieces/Unit)	Dimensions (length x width x height)	Gross weight	Volume
4058075408425	Shipping box 1	255 mm x 252 mm x 72 mm	1546.00 g	4.63 dm^3

The mentioned product code describes the smallest quantity unit which can be ordered. One shipping unit can contain one or more single products. When placing an order, for the quantity please enter single or multiples of a shipping unit.

© 2025, LEDVANCE GmbH. All rights reserved.

ADDITIONAL CATALOG INFORMATION

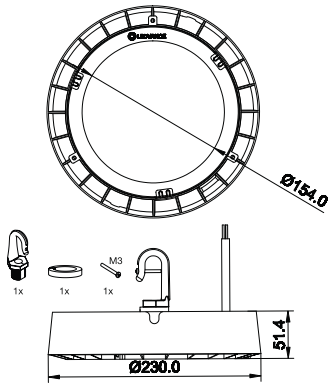

References / Links

– For Guarantee see www.ledvance.com/guarantee

DISCLAIMER

Subject to change without notice. Errors and omission excepted. Always make sure to use the most recent release.

© 2025, LEDVANCE GmbH. All rights reserved.