PRODUCT DATASHEET
FL PFM SYM 60 200 W 4000 K BK

FLOODLIGHT PERFORMANCE SYM 60 | Floodlight with symmetric light distribution for medium to high mast area lighting

Areas of application

- Direct replacement for luminaires using HID lamps
- Outdoor use (IP66)
- Parking
- Public areas
- Industry
- Sports facilities
- Lighting of large areas
- D-sign according to EN 60598-2-24 for fire-risk commercial unit, e.g. by accumulation of dust

Product benefits

- Energy savings of up to 90 % compared to halogen lamp floodlights
- Energy savings of up to 45 % compared to luminaires that use conventional discharge lamps
- Bright, robust and durable
- Homogeneous luminance distribution and reduced glare
- No upper light output ratio (ULOR 0%) when mounted at 0° tilt
- Key hole to ensure ease of installation
- 5 years guarantee

Product features

- High luminous efficacy: up to 140 lm/W
- Symmetric light distribution for medium to high mast area lighting
- Angled (45°) mounting bracket and up to 180° tilting
- Type of protection: IP66
- Impact resistance: IK08

© 2025, LEDVANCE GmbH. All rights reserved.

- Ambient temperature in operation: -30…+50 °C
- High surge protection: up to 10 kV (L/N-PE), 6 kV (L-N)
- Integrated breather for preventing condensation inside the luminaire
- Connection via 2 m cable, wiring required

© 2025, LEDVANCE GmbH. All rights reserved.

TECHNICAL DATA

Electrical data

Nominal wattage	200.00 W
Nominal voltage	220…240 V
Mains frequency	50…60 Hz
Nominal current	980 mA
Inrush current	67 A
Inrush current time T_{h50}	1000 µs
Max. number of luminaires per miniature circuit breaker B16	2
Max. number of luminaires per miniature circuit breaker C10	2
Max. number of luminaires per miniature circuit breaker C16	3
Power factor λ	> 0.90
Total harmonic distortion	< 20 %
Protection class	I
Operating mode	Integrated LED driver

Photometrical data

Luminous flux	28000 lm
Luminous efficacy	140 lm/W
Color temperature	4000 K
Light color (designation)	Cool White
Color rendering index Ra	> 80
Standard deviation of color matching	≤5 sdcm
Low flicker	Yes
Photobiological safety group acc. to EN62778	RG1
Photobiological safety group acc. to EN62471	RG1
Beam angle	60 ° x 60 °

© 2025, LEDVANCE GmbH. All rights reserved.

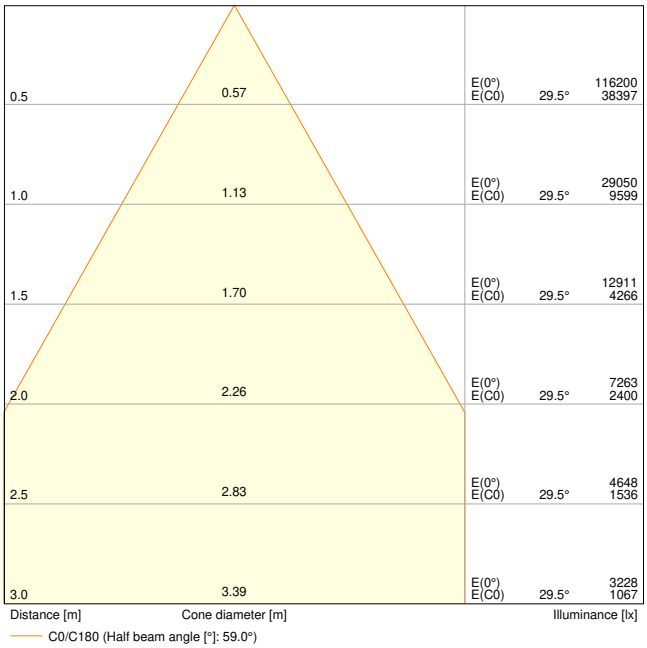

FL PFM 200W 4000K SYM 60 BK

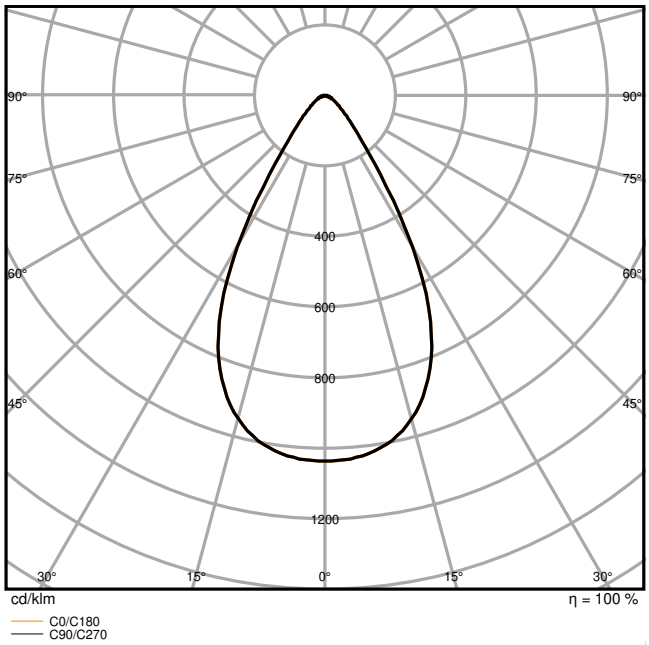

FL PFM 200W 4000K SYM 60 BK

Dimensions & Weight

Length	494.00 mm
Width	395.00 mm
Height	87.00 mm
Product weight	6300.00 g
Cable length	2000 mm

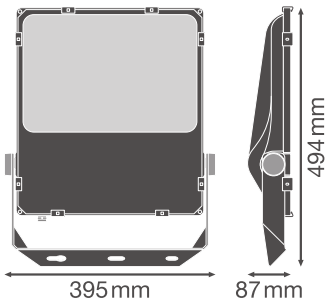

FL PFM 200W BK

Materials & Colors

© 2025, LEDVANCE GmbH. All rights reserved.

Product color	Black
Housing color	Black
RAL Color (most similar)	RAL 9017
Body material	Aluminum
Cover material	Glass
Light emitting surface material	Glass
Glow Wire Test according to IEC 60695-2-12	650 °C
Mercury content	0.0 mg

Application & Mounting

Ambient temperature range	-30…+50 °C
Temperature range at storage	-40…+70 °C
Type of connection	Cable, 3-pole
Type of protection	IP66
Protection class IK (shock resistance)	IK08
Dimmable	No
Mounting type	Surface
Mounting location	Wall / Pole / Floor / Ceiling
Application environment	Outdoor
Adjustable	Yes
With light source	Yes
Replaceable light source	No

Lifespan

Lifespan L70/B50 at 25 °C	100000 h [1)]
Lifespan L80/B10 at 25 °C	70000 h [1)]
Lifespan L80/B50 at 25 °C	70000 h
Lifespan L90/B10 at 25 °C	30000 h
Number of switching cycles	100000

1) t[h]: L70 / B50 @ 25 °C (Ta), t[h]: L80 / B10 @ 25 °C (Ta), t[h]: L90 / B10 @ 25 °C (Ta)

Control gear

Output current	3850 mA
ECG - Output ripple current	< 10 %

Certificates & Standards

© 2025, LEDVANCE GmbH. All rights reserved.

Standards	CE / CB / ENEC / TÜV SÜD / EAC
Luminaire with limited surface temperature, "D sign"	Yes
Ball shot safe	No

Safety advice

- All electrical connections must be made by a qualified person.
- The external flexible cable or cord of this luminaire cannot be replaced; if the cord is damaged, the luminaire must be disposed of.
- Terminal block not included. Installation must be made by a qualified person.
- Caution, risk of electric shock.
- Product in protection class I. All electrically conductive, metallic housing parts that can absorb voltage during operation or during maintenance in the event of a fault must be continuously connected to the protective earthing conductor.

DOWNLOAD DATA

	Documents and certificates	Document name
PDF	User instruction / safety instructions	FLOODLIGHT PERFORMANCE
PDF	Legal information	LSI FL PFM SYM AND ASYM
PDF	Legal information	Legal Insert FL PFM
PDF	Legal information	Informationstext 18 Abs 4 ElektroG
PDF	Declarations of conformity	FL PFM 200W SYM 60 BK
PDF	Declarations of conformity UKCA	FL PFM BK

	Photometric and lighting design files	Document name
IES	IES file (IES)	FL PFM 200W 4000K SYM 60 BK
LDT	LDT file (Eulumdat)	FL PFM 200W 4000K SYM 60 BK
ULD	ULD file (DIALux)	FL PFM 200W-4000K SYM
ROLF	ROLF file (RELUX)	FL PFM 200W-4000K SYM
	UGR file (UGR table)	FL PFM 200W 4000K SYM 60 BK

© 2025, LEDVANCE GmbH. All rights reserved.

	Photometric and lighting design files	Document name
	Light distribution curve type cone	FL PFM 200W 4000K SYM 60 BK
	Light distribution curve type polar	FL PFM 200W 4000K SYM 60 BK

	CAD/BIM files	Document name
	BIM Revit 3D	FL PFM
	CAD STEP 3D	FL PFM 200W

	Tender texts	Document name
	Tender documents	FLOODLIGHT PERFORMANCE SYM 60 200 W 4000 K BK-EN

LOGISTICAL DATA

Product code	Packaging unit (Pieces/Unit)	Dimensions (length x width x height)	Gross weight	Volume
4058075541016	Shipping box 1	568 mm x 140 mm x 430 mm	6878.00 g	34.19 dm^3

The mentioned product code describes the smallest quantity unit which can be ordered. One shipping unit can contain one or more single products. When placing an order, for the quantity please enter single or multiples of a shipping unit.

ADDITIONAL CATALOG INFORMATION

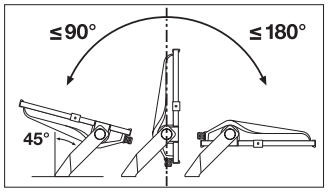

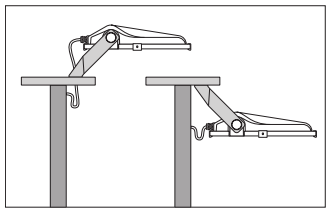

References / Links

– For Guarantee see www.ledvance.com/guarantee

DISCLAIMER

Subject to change without notice. Errors and omission excepted. Always make sure to use the most recent release.

© 2025, LEDVANCE GmbH. All rights reserved.