PRODUCT DATASHEET
FL PFM 20 W 4000 K SYM 100 BK

FLOODLIGHT 20 W | Versatile floodlight with up to 2400 lm light output

Areas of application

- Replacement for floodlights with halogen lamps
- Outdoor use (IP65)
- Public areas
- Building facades
- Construction areas
- Gardens, balconies and other outdoor areas

Product benefits

- Bright, robust and durable
- Safe and very uniform illumination, due to frosted and tempered glass diffuser
- No upper light output ratio (ULOR 0%) when mounted at 0° tilt
- Energy savings of up to 90 % compared to halogen lamp floodlights
- 5 years guarantee

Product features

- Reflector-based, symmetric light distribution with 100° x 100° beam angle
- Integrated wide voltage driver, suitable for 100 - 277 V_{AC}
- Surge protection: up to 4 kV (L/N-PE), 2 kV (L-N)
- Mounting bracket with 30° angle and wide rotation area
- Pre-installed, flexible 1 m cable (H05RN-F), wrapped 3 x 1.0 mm^2 single wires

© 2025, LEDVANCE GmbH. All rights reserved.

TECHNICAL DATA

Electrical data

Nominal wattage	20.00 W
Nominal voltage	100…277 V
Mains frequency	50…60 Hz
Nominal current	98 mA
Inrush current	5.68 A
Inrush current time T_{h50}	35 µs
Max. number of luminaires per miniature circuit breaker B16	93
Max. number of luminaires per miniature circuit breaker C10	67
Max. number of luminaires per miniature circuit breaker C16	108
Power factor λ	> 0.90
Total harmonic distortion	< 20 %
Protection class	I
Operating mode	Integrated LED driver

Photometrical data

Luminous flux	2400 lm
Luminous efficacy	120 lm/W
Color temperature	4000 K
Light color (designation)	Cool White
Color rendering index Ra	≥80
Standard deviation of color matching	≤5 sdcm
Luminous intensity	-
Flickering metric (Pst LM)	-
Stroboscope effect metric (SVM)	-
Photobiological safety group acc. to EN62778	RG1
Photobiological safety group acc. to EN62471	RG1
Beam angle	100 ° x 100 °

© 2025, LEDVANCE GmbH. All rights reserved.

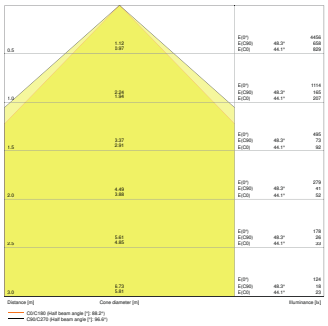

FL PFM 20W4000K SYM 100 BK

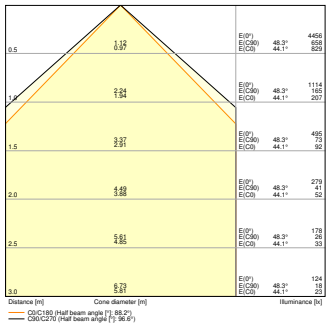

FL PFM 20W 4000K SYM 100 BK

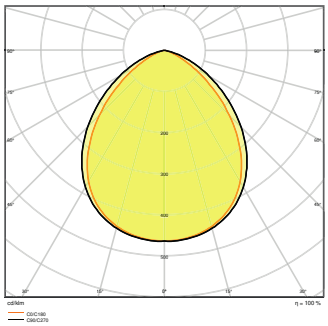

FL PFM 20W4000K SYM 100 BK

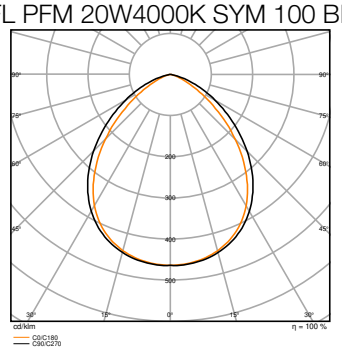

FL PFM 20W 4000K SYM 100 BK

Dimensions & Weight

Length	144.00 mm
Width	156.00 mm
Height	42.00 mm
Product weight	520.00 g
Cable length	1000 mm

© 2025, LEDVANCE GmbH. All rights reserved.

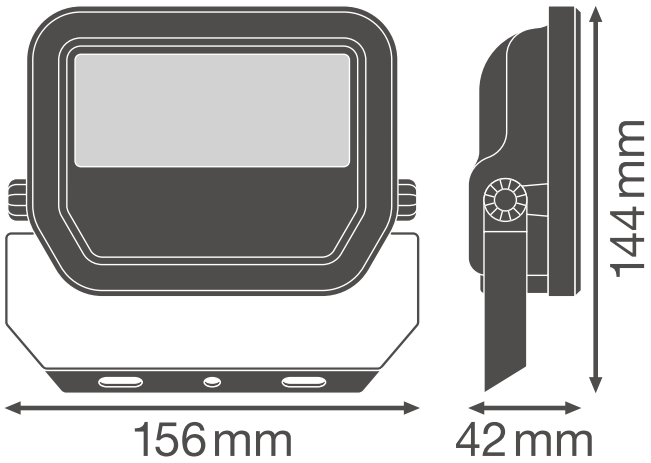

FL PFM 20W SYM 100

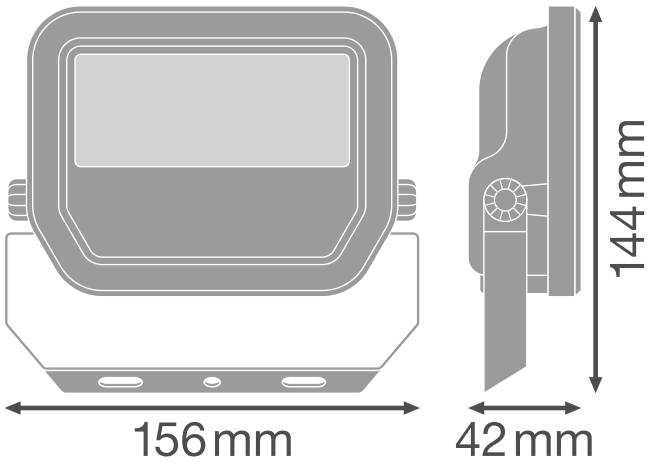

FL PFM 20W SYM 100

Materials & Colors

Product color	Black
Housing color	Black
RAL Color (most similar)	RAL 9017
Body material	Aluminum
Light emitting surface material	Glass
Glow Wire Test according to IEC 60695-2-12	650 °C
Mercury content	0.0 mg

Application & Mounting

Ambient temperature range	-30…+50 °C
Temperature range at storage	-40…+70 °C
Type of connection	Cable, 3-pole
Type of protection	IP65
Protection class IK (shock resistance)	IK07
Dimmable	No
Mounting type	Surface
Mounting location	Wall / Ceiling / Floor
Application environment	Outdoor
Adjustable	Yes
With light source	Yes
Replaceable light source	No

© 2025, LEDVANCE GmbH. All rights reserved.

Lifespan

Lifespan L70/B50 at 25 °C	70000 h [1)]
Lifespan L80/B10 at 25 °C	55000 h [1)]
Lifespan L80/B50 at 25 °C	55000 h
Lifespan L90/B10 at 25 °C	35000 h
Number of switching cycles	100000

1) t[h]: L70 / B50 @ 25 °C (Ta), t[h]: L80 / B10 @ 25 °C (Ta), t[h]: L90 / B10 @ 25 °C (Ta)

Control gear

Output current	230 mA
ECG - Output ripple current	< 50 %

Certificates & Standards

Standards	CE / CB / ENEC / EAC / RoHS / EPD
Luminaire with limited surface temperature, "D sign"	No
Ball shot safe	No
EPD	LEDV-00009-V01.01-EN
Replaceable light source (EPREL)	Not replaceable

Safety advice

- All electrical connections must be made by a qualified person.
- The external flexible cable or cord of this luminaire cannot be replaced; if the cord is damaged, the luminaire must be disposed of.
- Terminal block not included. Installation must be made by a qualified person.
- Caution, risk of electric shock.
- Product in protection class I. All electrically conductive, metallic housing parts that can absorb voltage during operation or during maintenance in the event of a fault must be continuously connected to the protective earthing conductor.

DOWNLOAD DATA

	Documents and certificates	Document name
PDF	User instruction / safety instructions	FL PFM SYM
PDF	Legal information	FL PFM SYM
PDF	Legal information	LSI FL PFM SYM
PDF	Legal information	FL PFM SYM

© 2025, LEDVANCE GmbH. All rights reserved.

	Documents and certificates	Document name
	Legal information	Informationstext 18 Abs 4 ElektroG
	Declarations of conformity	FL PFM
	Declarations of conformity UKCA	FL PFM SYM
	Declarations of conformity UKCA	FL PFM

	Photometric and lighting design files	Document name
	IES file (IES)	FL PFM 20W4000K SYM 100 BK
	IES file (IES)	FL PFM 20W 4000K SYM 100 BK
	LDT file (Eulumdat)	FL PFM 20W4000K SYM 100 BK
	LDT file (Eulumdat)	FL PFM 20W 4000K SYM 100 BK
	ULD file (DIALux)	FL PFM 20W-4000K SYM 100 BK
	ROLF file (RELUX)	FL PFM 20W-4000K SYM
	UGR file (UGR table)	FL PFM 20W4000K SYM 100 BK
	UGR file (UGR table)	FL PFM 20W 4000K SYM 100 BK
	Light distribution curve type cone	FL PFM 20W4000K SYM 100 BK
	Light distribution curve type cone	FL PFM 20W 4000K SYM 100 BK
	Light distribution curve type polar	FL PFM 20W4000K SYM 100 BK
	Light distribution curve type polar	FL PFM 20W 4000K SYM 100 BK

	CAD/BIM files	Document name
	BIM Revit 3D	Floodlight G3
	CAD STEP 3D	FL G3 20W

© 2025, LEDVANCE GmbH. All rights reserved.

	Tender texts	Document name
	Tender documents	FLOODLIGHT 20 W 4000 K SYM 100 BK-EN

LOGISTICAL DATA

Product code	Packaging unit (Pieces/Unit)	Dimensions (length x width x height)	Gross weight	Volume
4058075421011	Folding box 1	161 mm x 62 mm x 135 mm	572.00 g	1.35 dm^3
4058075421028	Shipping box 12	396 mm x 336 mm x 161 mm	7510.00 g	21.42 dm^3

The mentioned product code describes the smallest quantity unit which can be ordered. One shipping unit can contain one or more single products. When placing an order, for the quantity please enter single or multiples of a shipping unit.

ADDITIONAL CATALOG INFORMATION

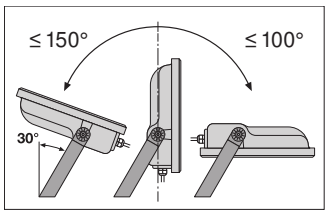

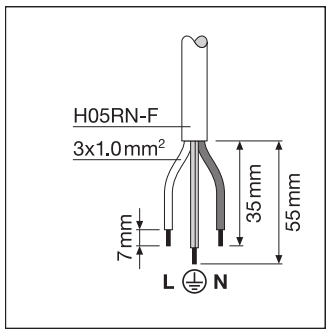

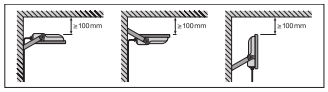

References / Links

– For Guarantee see www.ledvance.com/guarantee

DISCLAIMER

Subject to change without notice. Errors and omission excepted. Always make sure to use the most recent release.

© 2025, LEDVANCE GmbH. All rights reserved.