# PRODUCT DATASHEET
# FL PFM 20 W 4000 K SYM 100 WT

FLOODLIGHT 20 W | Versatile floodlight with up to 2400 lm light output

## Areas of application

- Replacement for floodlights with halogen lamps
- Outdoor use (IP65)
- Public areas
- Building facades
- Construction areas
- Gardens, balconies and other outdoor areas

## Product benefits

- Bright, robust and durable
- Safe and very uniform illumination, due to frosted and tempered glass diffuser
- No upper light output ratio (ULOR 0%) when mounted at 0° tilt
- Energy savings of up to 90 % compared to halogen lamp floodlights
- 5 years guarantee

## Product features

- Reflector-based, symmetric light distribution with 100° x 100° beam angle
- Integrated wide voltage driver, suitable for 100 - 277 $V_{AC}$
- Surge protection: up to 4 kV (L/N-PE), 2 kV (L-N)
- Mounting bracket with 30° angle and wide rotation area
- Pre-installed, flexible 1 m cable (H05RN-F), wrapped 3 x 1.0 $mm^2$ single wires


© 2025, LEDVANCE GmbH. All rights reserved.

## TECHNICAL DATA

### Electrical data

| | |
|---|---|
| Nominal wattage | 20.00 W |
| Nominal voltage | 100…277 V |
| Mains frequency | 50…60 Hz |
| Nominal current | 98 mA |
| Inrush current | 5.68 A |
| Inrush current time $T_{h50}$ | 35 µs |
| Max. number of luminaires per miniature circuit breaker B16 | 93 |
| Max. number of luminaires per miniature circuit breaker C10 | 67 |
| Max. number of luminaires per miniature circuit breaker C16 | 108 |
| Power factor λ | > 0.90 |
| Total harmonic distortion | < 20 % |
| Protection class | I |
| Operating mode | Integrated LED driver |

### Photometrical data

| | |
|---|---|
| Luminous flux | 2400 lm |
| Luminous efficacy | 120 lm/W |
| Color temperature | 4000 K |
| Light color (designation) | Cool White |
| Color rendering index Ra | ≥80 |
| Standard deviation of color matching | ≤5 sdcm |
| Luminous intensity | - |
| Flickering metric (Pst LM) | - |
| Stroboscope effect metric (SVM) | - |
| Photobiological safety group acc. to EN62778 | RG1 |
| Photobiological safety group acc. to EN62471 | RG1 |
| Beam angle | 100 ° x 100 ° |


© 2025, LEDVANCE GmbH. All rights reserved.

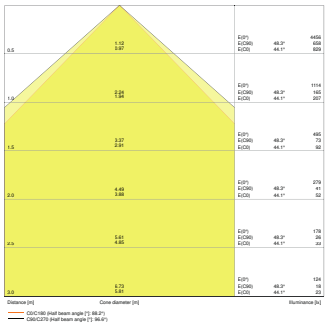

FL PFM 20W4000K SYM 100 WT

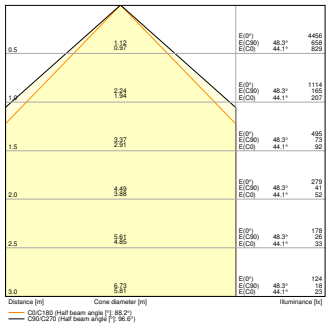

FL PFM 20W 4000K SYM 100 WT

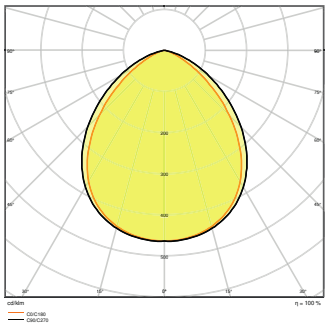

FL PFM 20W4000K SYM 100 WT

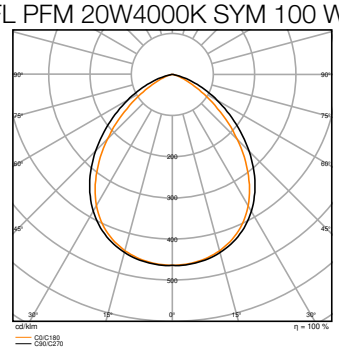

FL PFM 20W 4000K SYM 100 WT

## Dimensions & Weight

| | |
|---|---|
| Length | 144.00 mm |
| Width | 156.00 mm |
| Height | 42.00 mm |
| Product weight | 520.00 g |
| Cable length | 1000 mm |


© 2025, LEDVANCE GmbH. All rights reserved.

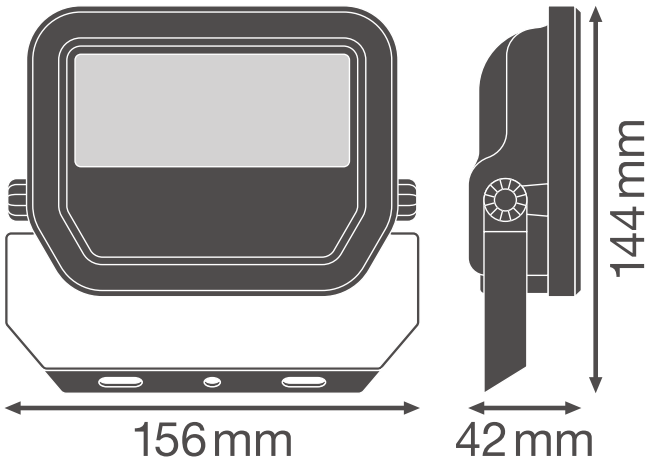

FL PFM 20W SYM 100

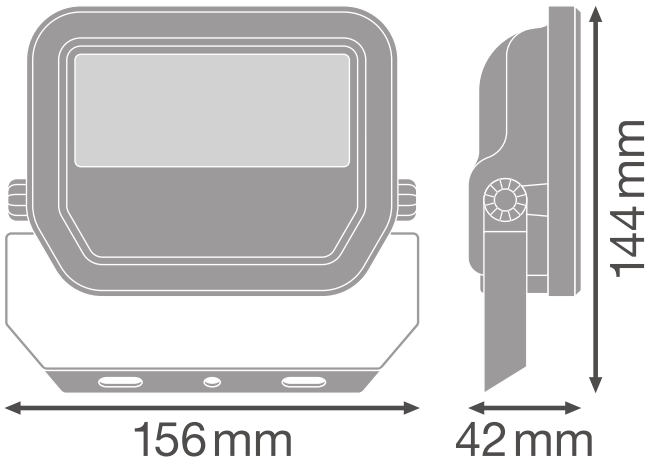

FL PFM 20W SYM 100

## Materials & Colors

| | |
|---|---|
| Product color | White |
| Housing color | White |
| RAL Color (most similar) | RAL 9003 |
| Body material | Aluminum |
| Light emitting surface material | Glass |
| Glow Wire Test according to IEC 60695-2-12 | 650 °C |

## Application & Mounting

| | |
|---|---|
| Ambient temperature range | -30…+50 °C |
| Temperature range at storage | -40…+70 °C |
| Type of connection | Cable, 3-pole |
| Type of protection | IP65 |
| Protection class IK (shock resistance) | IK07 |
| Dimmable | No |
| Mounting type | Surface |
| Mounting location | Wall / Ceiling / Floor |
| Application environment | Outdoor |
| Adjustable | Yes |
| With light source | Yes |
| Replaceable light source | No |

## Lifespan


© 2025, LEDVANCE GmbH. All rights reserved.

| | |
|---|---|
| Lifespan L70/B50 at 25 °C | 70000 h [1)] |
| Lifespan L80/B10 at 25 °C | 55000 h [1)] |
| Lifespan L80/B50 at 25 °C | 55000 h |
| Lifespan L90/B10 at 25 °C | 35000 h |
| Number of switching cycles | 100000 |

1) t[h]: L70 / B50 @ 25 °C (Ta), t[h]: L80 / B10 @ 25 °C (Ta), t[h]: L90 / B10 @ 25 °C (Ta)

## Control gear

| | |
|---|---|
| Output current | 230 mA |
| ECG - Output ripple current | < 50 % |

## Certificates & Standards

| | |
|---|---|
| Standards | CE / CB / ENEC / EAC / RoHS / EPD |
| Luminaire with limited surface temperature, "D sign" | No |
| Ball shot safe | No |
| EPD | LEDV-00009-V01.01-EN |
| Replaceable light source (EPREL) | Not replaceable |

## Safety advice

- All electrical connections must be made by a qualified person.
- The external flexible cable or cord of this luminaire cannot be replaced; if the cord is damaged, the luminaire must be disposed of.
- Terminal block not included. Installation must be made by a qualified person.
- Caution, risk of electric shock.
- Product in protection class I. All electrically conductive, metallic housing parts that can absorb voltage during operation or during maintenance in the event of a fault must be continuously connected to the protective earthing conductor.

## DOWNLOAD DATA

| | Documents and certificates | Document name |
|---|---|---|
| PDF | User instruction / safety instructions | FL PFM SYM |
| PDF | Legal information | FL PFM SYM |
| PDF | Legal information | LSI FL PFM SYM |
| PDF | Legal information | FL PFM SYM |


© 2025, LEDVANCE GmbH. All rights reserved.

| | Documents and certificates | Document name |
|---|---|---|
| | Legal information | Informationstext 18 Abs 4 ElektroG |
| | Declarations of conformity | FL PFM |
| | Declarations of conformity UKCA | FL PFM SYM |
| | Declarations of conformity UKCA | FL PFM |

| | Photometric and lighting design files | Document name |
|---|---|---|
| | IES file (IES) | FL PFM 20W4000K SYM 100 WT |
| | IES file (IES) | FL PFM 20W 4000K SYM 100 WT |
| | LDT file (Eulumdat) | FL PFM 20W4000K SYM 100 WT |
| | LDT file (Eulumdat) | FL PFM 20W 4000K SYM 100 WT |
| | ULD file (DIALux) | FL PFM 20W-4000K SYM 100 WT |
| | ROLF file (RELUX) | FL PFM 20W-4000K SYM |
| | UGR file (UGR table) | FL PFM 20W4000K SYM 100 WT |
| | UGR file (UGR table) | FL PFM 20W 4000K SYM 100 WT |
| | Light distribution curve type cone | FL PFM 20W4000K SYM 100 WT |
| | Light distribution curve type cone | FL PFM 20W 4000K SYM 100 WT |
| | Light distribution curve type polar | FL PFM 20W4000K SYM 100 WT |
| | Light distribution curve type polar | FL PFM 20W 4000K SYM 100 WT |

| | CAD/BIM files | Document name |
|---|---|---|
| | BIM Revit 3D | Floodlight G3 |
| | CAD STEP 3D | FL G3 20W |


© 2025, LEDVANCE GmbH. All rights reserved.

| | Tender texts | Document name |
|---|---|---|
| | Tender documents | FLOODLIGHT 20 W 4000 K SYM 100 WT-EN |

## LOGISTICAL DATA

| Product code | Packaging unit (Pieces/Unit) | Dimensions (length x width x height) | Gross weight | Volume |
|---|---|---|---|---|
| 4058075421035 | Folding box<br>1 | 161 mm x 62 mm x 135 mm | 572.00 g | 1.35 $dm^3$ |
| 4058075421042 | Shipping box<br>12 | 396 mm x 336 mm x 161 mm | 7510.00 g | 21.42 $dm^3$ |

The mentioned product code describes the smallest quantity unit which can be ordered. One shipping unit can contain one or more single products. When placing an order, for the quantity please enter single or multiples of a shipping unit.

## ADDITIONAL CATALOG INFORMATION

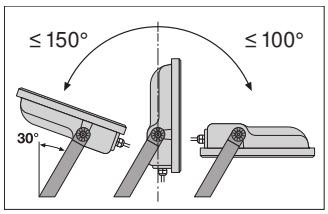


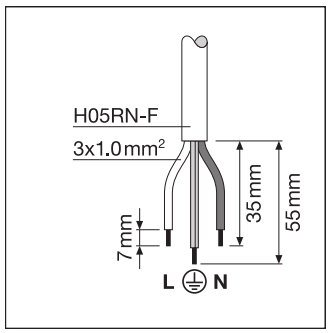


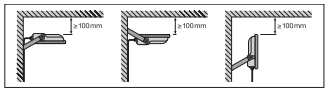

## References / Links

– For Guarantee see www.ledvance.com/guarantee

## DISCLAIMER

Subject to change without notice. Errors and omission excepted. Always make sure to use the most recent release.


© 2025, LEDVANCE GmbH. All rights reserved.