PRODUCT DATASHEET
FL PFM 165 W 6500 K SYM 100 BK

FLOODLIGHT 165 W | Versatile floodlight with up to 20000 lm light output

Areas of application

- Replacement for floodlights with halogen lamps
- Outdoor use (IP65)
- Industry
- Public areas
- Construction areas
- Building facades

Product benefits

- Bright, robust and durable
- Safe and very uniform illumination, due to frosted and tempered glass diffuser
- No upper light output ratio (ULOR 0%) when mounted at 0° tilt
- Energy savings of up to 90 % compared to halogen lamp floodlights
- 5 years guarantee

Product features

- Reflector-based, symmetric light distribution with 100° x 100° beam angle
- Integrated wide voltage driver, suitable for 100 - 277 V_{AC}
- Surge protection: up to 6 kV (L/N-PE), 4 kV (L-N)
- Mounting bracket with 30° angle and wide rotation area
- Breather membrane to optimize air exchange, without compromising IP protection
- Pre-installed, flexible 1 m cable (H05RN-F), wrapped 3 x 1.0 mm^2 single wires

© 2025, LEDVANCE GmbH. All rights reserved.

TECHNICAL DATA

Electrical data

Nominal wattage	165.00 W
Nominal voltage	100…277 V
Mains frequency	50…60 Hz
Nominal current	830 mA
Inrush current	80 A
Inrush current time T_{h50}	1000 µs
Max. number of luminaires per miniature circuit breaker B16	3
Max. number of luminaires per miniature circuit breaker C10	5
Max. number of luminaires per miniature circuit breaker C16	8
Power factor λ	> 0.90
Total harmonic distortion	< 20 %
Protection class	I
Operating mode	Integrated LED driver

Photometrical data

Luminous flux	20000 lm
Luminous efficacy	121 lm/W
Color temperature	6500 K
Light color (designation)	Cool Daylight
Color rendering index Ra	≥80
Standard deviation of color matching	≤5 sdcm
Luminous intensity	-
Low flicker	Yes
Flickering metric (Pst LM)	-
Stroboscope effect metric (SVM)	-
Photobiological safety group acc. to EN62778	RG1
Photobiological safety group acc. to EN62471	RG1
Beam angle	100 ° x 100 °

© 2025, LEDVANCE GmbH. All rights reserved.

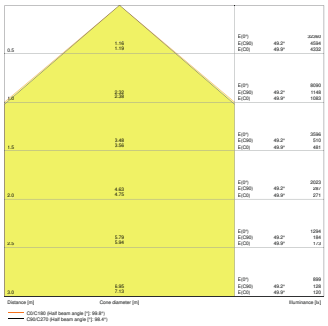

FL PFM 165W6500K SYM 100 BK

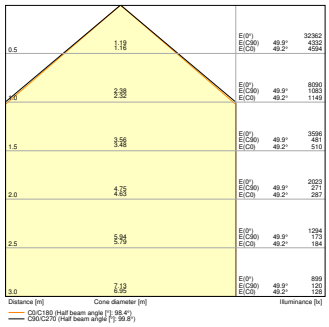

FL PFM 165W 6500K SYM 100 BK

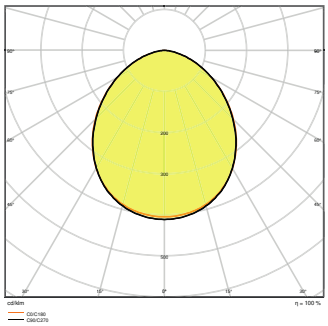

FL PFM 165W6500K SYM 100 BK

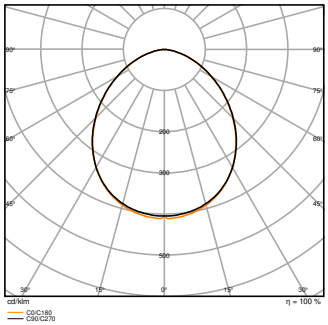

FL PFM 165W 6500K SYM 100 BK

Dimensions & Weight

Length	418.00 mm
Width	322.00 mm
Height	60.00 mm
Product weight	4800.00 g
Cable length	1000 mm

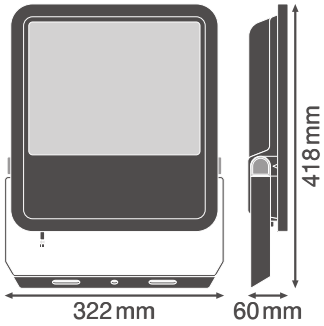

FL PFM 165W

© 2025, LEDVANCE GmbH. All rights reserved.

Materials & Colors

Product color	Black
Housing color	Black
RAL Color (most similar)	RAL 9017
Body material	Aluminum
Light emitting surface material	Glass
Glow Wire Test according to IEC 60695-2-12	650 °C
Mercury content	0.0 mg

Application & Mounting

Ambient temperature range	-30…+50 °C
Temperature range at storage	-40…+70 °C
Type of connection	Cable, 3-pole
Type of protection	IP65
Protection class IK (shock resistance)	IK08
Dimmable	No
Mounting type	Surface
Mounting location	Wall / Pole / Floor / Ceiling
Application environment	Outdoor
Adjustable	Yes
With light source	Yes
Replaceable light source	No

Lifespan

Lifespan L70/B50 at 25 °C	70000 h [1)]
Lifespan L80/B10 at 25 °C	55000 h [1)]
Lifespan L80/B50 at 25 °C	55000 h
Lifespan L90/B10 at 25 °C	35000 h
Number of switching cycles	100000

1) t[h]: L70 / B50 @ 25 °C (Ta), t[h]: L80 / B10 @ 25 °C (Ta), t[h]: L90 / B10 @ 25 °C (Ta)

Control gear

Output current	920 mA
ECG - Output ripple current	< 35 %

Certificates & Standards

© 2025, LEDVANCE GmbH. All rights reserved.

Standards	CE / CB / ENEC / EAC / RoHS / EPD
Luminaire with limited surface temperature, "D sign"	No
Ball shot safe	No
EPD	LEDV-00017-V01.01-EN

Safety advice

– Max. wind load surface 0.102 m^2

DOWNLOAD DATA

	Documents and certificates	Document name
PDF	User instruction / safety instructions	UI FL PFM 65W - 200 W
PDF	Legal information	LSI FL PFM SYM
PDF	Legal information	LSI FL PFM SYM
PDF	Legal information	Legal Insert FL PFM
PDF	Legal information	Informationstext 18 Abs 4 ElektroG
PDF	Declarations of conformity	FLOODLIGHT PFM
PDF	Declarations of conformity UKCA	FL PFM SYM

	Photometric and lighting design files	Document name
IES	IES file (IES)	FL PFM 165W6500K SYM 100 BK
IES	IES file (IES)	FL PFM 165W 6500K SYM 100 BK
LDT	LDT file (Eulumdat)	FL PFM 165W6500K SYM 100 BK
LDT	LDT file (Eulumdat)	FL PFM 165W 6500K SYM 100 BK
ULD	ULD file (DIALux)	FL PFM 165W-6500K SYM 100 BK

© 2025, LEDVANCE GmbH. All rights reserved.

	Photometric and lighting design files	Document name
	ROLF file (RELUX)	FL PFM 165W-6500K SYM
	UGR file (UGR table)	FL PFM 165W6500K SYM 100 BK
	UGR file (UGR table)	FL PFM 165W 6500K SYM 100 BK
	Light distribution curve type cone	FL PFM 165W6500K SYM 100 BK
	Light distribution curve type cone	FL PFM 165W 6500K SYM 100 BK
	Light distribution curve type polar	FL PFM 165W6500K SYM 100 BK
	Light distribution curve type polar	FL PFM 165W 6500K SYM 100 BK

	CAD/BIM files	Document name
	BIM Revit 3D	Floodlight G3
	CAD STEP 3D	FL G3 165W

	Tender texts	Document name
	Tender documents	FLOODLIGHT 165 W 6500 K SYM 100 BK-EN

LOGISTICAL DATA

Product code	Packaging unit (Pieces/Unit)	Dimensions (length x width x height)	Gross weight	Volume
4058075423749	Shipping box 1	375 mm x 93 mm x 480 mm	5375.00 g	16.74 dm^3

The mentioned product code describes the smallest quantity unit which can be ordered. One shipping unit can contain one or more single products. When placing an order, for the quantity please enter single or multiples of a shipping unit.

ADDITIONAL CATALOG INFORMATION

© 2025, LEDVANCE GmbH. All rights reserved.

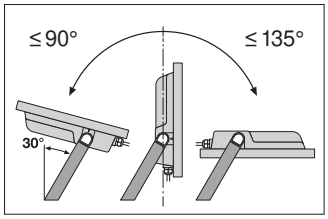

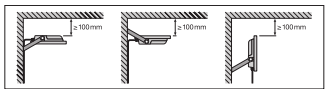

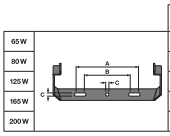

	A	B	C		
65 W	150	108	8,5	2x M8	0,046 m²
80 W	150	108	10,5	2x M10	0,061 m²
125 W	170	118	10,5	2x M10	0,083 m²
165 W	170	118	12,5	2x M12	0,102 m²
200 W	170	118	12,5	2x M12	0,124 m²

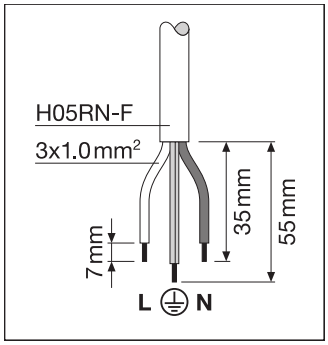

References / Links

– For Guarantee see www.ledvance.com/guarantee

DISCLAIMER

Subject to change without notice. Errors and omission excepted. Always make sure to use the most recent release.

© 2025, LEDVANCE GmbH. All rights reserved.